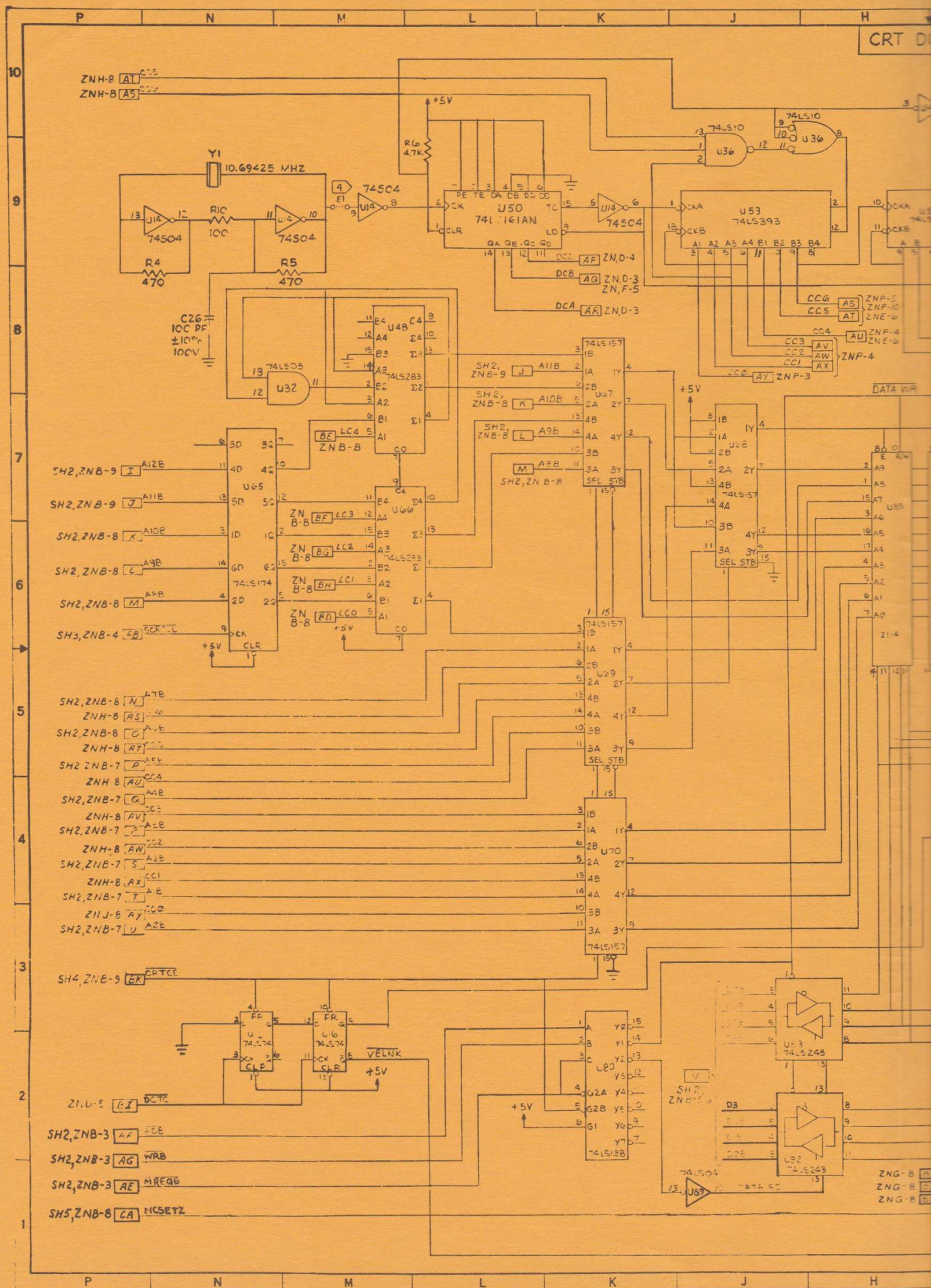
CRT D
ZNH-8 AT
ZNH-8 AS
Y1
10.69425 MHZ
R4 470
R5 470
R10 100
R6 4.7K
+5V
C26 100 PF ±10% 100V
U50 74L 161AN
U53 74LS393
U36 74LS10
U32 74LS08
U48 74LS283
U65 74LS174
U66 74LS283
U67 74LS157
U68 74LS157
U69 74LS157
U70 74LS157
U80 74LS138
U83 74LS243
U82 74LS243
U85 2114
U84 74LS04
U86 74LS74
U87 74LS74
DATA WIR
SH2, ZNB-9 I A12B
SH2, ZNB-9 J A11B
SH2, ZNB-8 K A10B
SH2, ZNB-8 L A9B
SH2, ZNB-8 M A8B
SH3, ZNB-4 KB SCRATCL
SH2, ZNB-8 N A7B
SH2, ZNB-8 O A6B
SH2, ZNB-7 P A5B
SH2, ZNB-7 Q A4B
SH2, ZNB-7 R A3B
SH2, ZNB-7 S A2B
SH2, ZNB-7 T A1B
SH2, ZNB-7 U A0B
SH4, ZNB-9 EK CRTCE
ZNJ-5 CI DCTC
SH2, ZNB-3 AF RDB
SH2, ZNB-3 AG WRB
SH2, ZNB-3 AE MREQB
SH5, ZNB-8 CA NCSETZ
VELNK
DATA BO

DISPLAY GEN

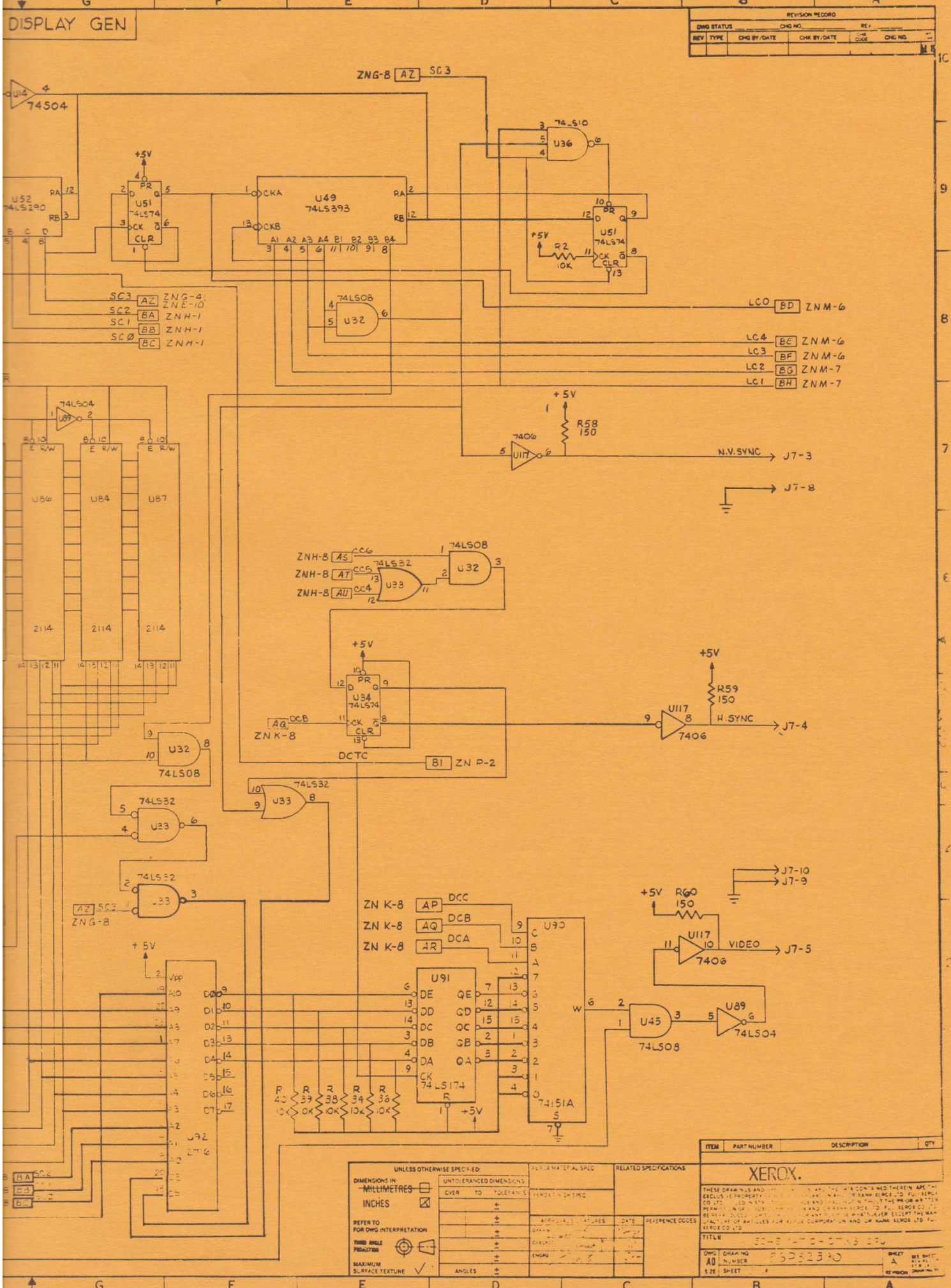
REVISION RECORD
DWG STATUS
CHG NO.
REV
REV | TYPE | CHG BY/DATE | CHK BY/DATE | CODE | CHG NO.
ZNG-8 AZ SC3
U14 74S04
74LS10 U36
U52 74LS290
U51 74LS74
U49 74LS393
+5V
R2 10K
SC3 AZ ZNG-4; ZNE-10
SC2 BA ZNH-1
SC1 BB ZNH-1
SCØ BC ZNH-1
74LS08 U32
LCØ BD ZNM-6
LC4 BE ZNM-6
LC3 BF ZNM-6
LC2 BG ZNM-7
LC1 BH ZNM-7
74LS04 U89
R58 150
7406 U117
N.V.SYNC J7-3
J7-8
U86 U84 U87
2114
ZNH-8 AS CC6
ZNH-8 AT CC5
ZNH-8 AU CC4
74LS32 U33
U34 74LS74
AQ DCB ZN K-8
DCTC
BI ZN P-2
R59 150
H.SYNC J7-4
J7-10
J7-9
R60 150
VIDEO J7-5
ZNG-8 AZ SC3
U92 2716
U91
U90 74151A
ZN K-8 AP DCC
ZN K-8 AQ DCB
ZN K-8 AR DCA
74LS174
R 40 10K
R 39 10K
R 38 10K
R 34 10K
R 36 10K
U45 74LS08
UNLESS OTHERWISE SPECIFIED:
DIMENSIONS IN: MILLIMETRES / INCHES
REFER TO FOR DWG INTERPRETATION
MAXIMUM SURFACE TEXTURE
RELATED SPECIFICATIONS
ITEM | PART NUMBER | DESCRIPTION | QTY
XEROX.
TITLE
DWG NO. 5505230
SIZE A0
SHEET A

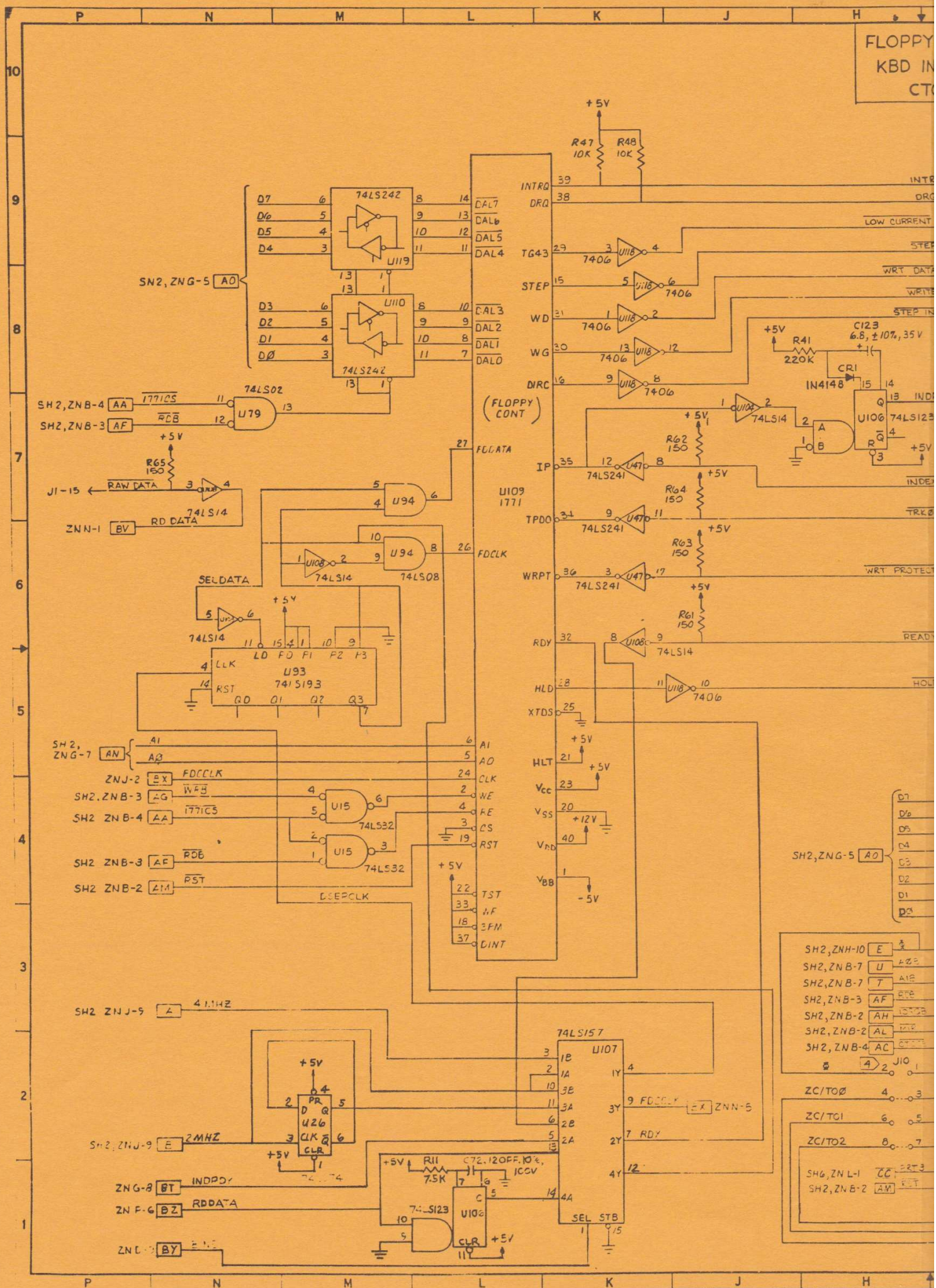
FLOPPY
KBD IN
CT
+5V
R47 10K
R48 10K
INTRQ
DRQ
INTR
DRQ
LOW CURRENT
STEP
WRT DATA
WRITE
STEP IN
INDE
TRK0
WRT PROTECT
READY
HOL
74LS242
U119
U110
D7
D6
D5
D4
D3
D2
D1
D0
DAL7
DAL6
DAL5
DAL4
DAL3
DAL2
DAL1
DAL0
SN2, ZNG-5 AD
(FLOPPY CONT)
TG43
STEP
WD
WG
DIRC
7406
U118
C123 6.8, ±10%, 35V
R41 220K
CR1 IN4148
U104
74LS14
U106
74LS123
R62 150
R64 150
R63 150
R61 150
74LS241
U47
IP
TPD0
WRPT
RDY
HLD
XTDS
U109 1771
FDDATA
FDCLK
SEL DATA
U94
74LS08
U108
U93
74LS193
LD FD FI F2 F3
CLK
RST
Q0 Q1 Q2 Q3
SH2, ZNG-7 AN
AI
AO
ZNJ-2 BX FDCCLK
SH2.ZNB-3 AG WRB
SH2 ZNB-4 AA 1771CS
SH2 ZNB-3 AF RDB
SH2 ZNB-2 AM RST
DSERCLK
U15
74LS32
HLT
Vcc
VSS
VDD
VBB
+12V
-5V
TST
HF
3FM
DINT
SH2,ZNG-5 AD
D7
D6
D5
D4
D3
D2
D1
D0
SH2,ZNH-10 E
SH2,ZNB-7 U
SH2,ZNB-7 T
SH2,ZNB-3 AF
SH2,ZNB-2 AH
SH2,ZNB-2 AL
SH2,ZNB-4 AC
J10
ZC/TO0
ZC/TO1
ZC/TO2
SH2,ZNL-1 ZC
SH2,ZNB-2 AM
SH2 ZNJ-9 A 4.1MHZ
74LS157
U107
1B 2B 3B 4B
1A 2A 3A 4A
1Y 2Y 3Y 4Y
SEL STB
9 FDCCLK BX ZNN-5
7 RDY
SH2,ZNJ-9 E 2MHZ
U26
PR D Q CLK Q CLR
R11 7.5K
C72, 120PF, 10%, 100V
U102
74LS123
ZNG-8 BT INDPDY
ZNF-6 BZ RDDATA
ZND-5 BY
SH2,ZNB-1 ZC
SH2,ZNB-2 AM
RST
RAW DATA
RD DATA
J1-15
ZNN-1 BV
74LS14
RG5 150

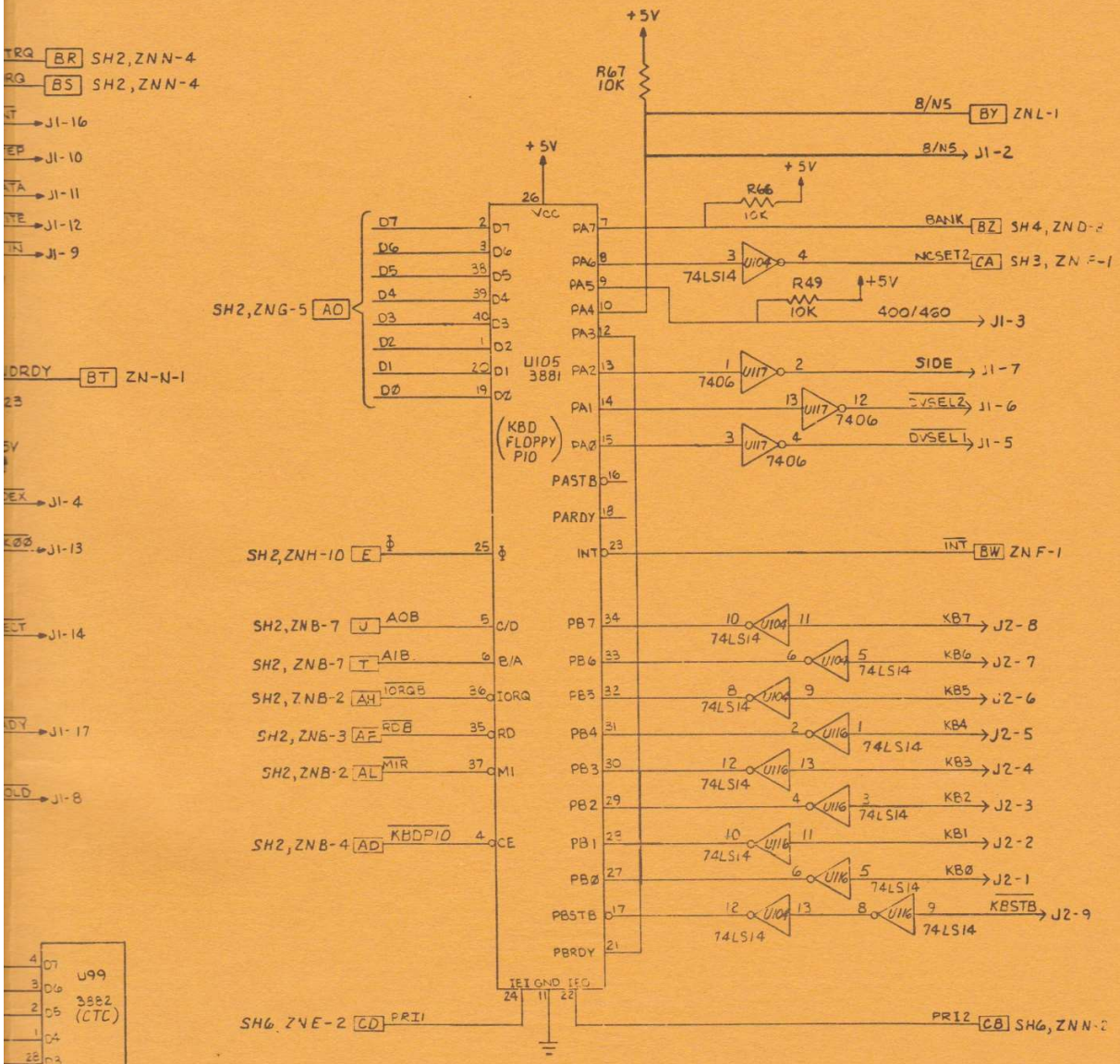
+5V
R67 10K
8/N5 BY ZNL-1
8/N5 J1-2
+5V
R66 10K
BANK BZ SH4, ZND-2
NCSET2 CA SH3, ZNF-1
R49 10K +5V
400/460 J1-3
SIDE J1-7
DVSEL2 J1-6
DVSEL1 J1-5
INT BW ZNF-1
KB7 J2-8
KB6 J2-7
KB5 J2-6
KB4 J2-5
KB3 J2-4
KB2 J2-3
KB1 J2-2
KB0 J2-1
KBSTB J2-9
PRI2 C8 SH6, ZNN-2
SH2, ZNG-5 AO
SH2, ZNH-10 E
SH2, ZNB-7 J AOB
SH2, ZNB-7 T AIB
SH2, ZNB-2 AH IORQB
SH2, ZNB-3 AF RDB
SH2, ZNB-2 AL MIR
SH2, ZNB-4 AD KBDPIO
SH6, ZNE-2 CD PRI1
U105 3881
(KBD FLOPPY PIO)
PASTB
PARDY
PBSTB
PBRDY
IEI GND IEO
74LS14
7406
U99 3882 (CTC)
ZC/TO0
ZC/TO1
ZC/TO2
INT BW ZNB-7; SH2, ZNN-4
SH6, ZNG-2
SH6, ZNN-1

GP
PIO
SIO

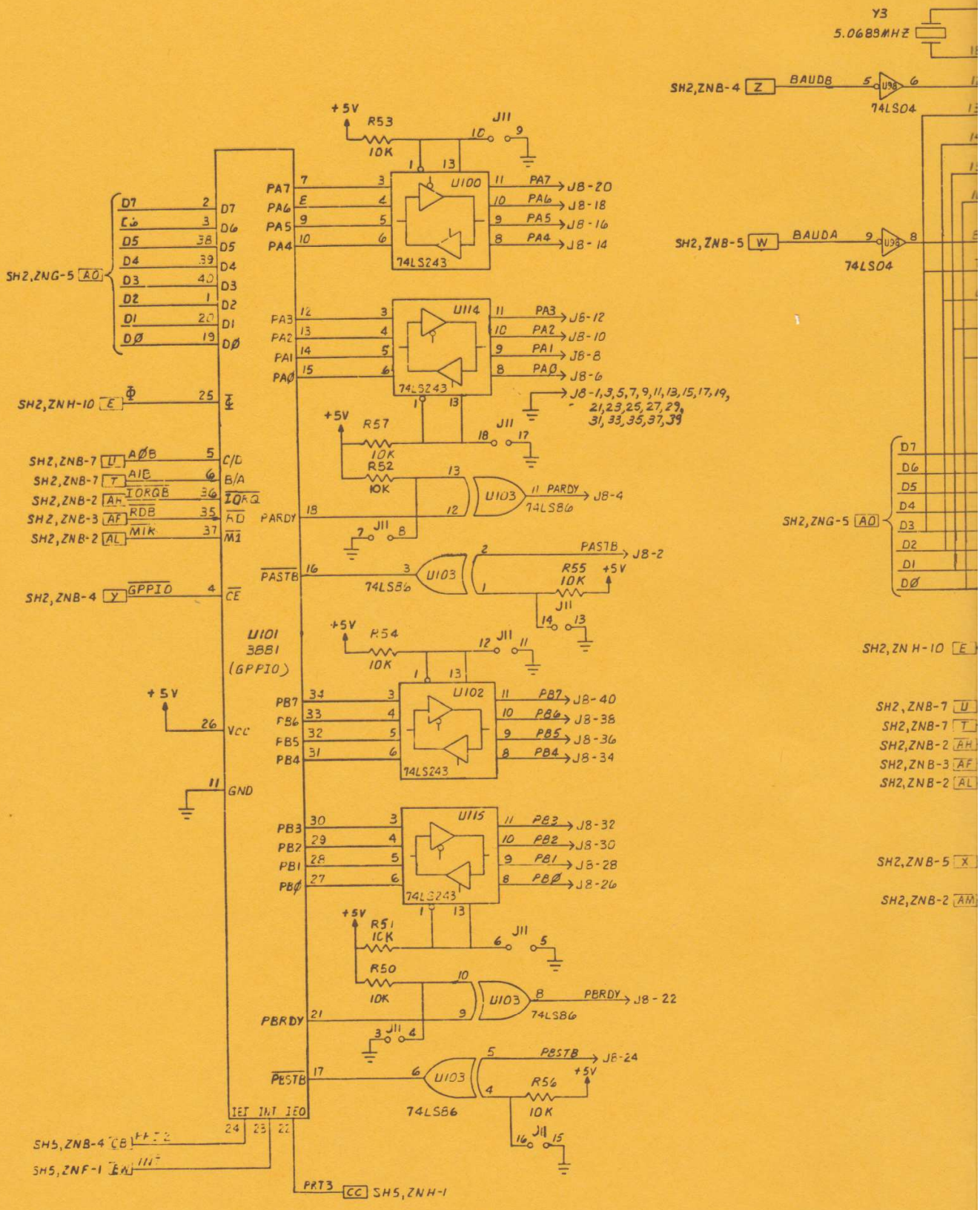
Y3
5.0688MHZ
SH2,ZNB-4 Z
BAUDB
74LS04
SH2,ZNB-5 W
BAUDA
74LS04
+5V
R53
10K
J11
U100
74LS243
PA7
PA6
PA5
PA4
J8-20
J8-18
J8-16
J8-14
SH2,ZNG-5 AO
D7
D6
D5
D4
D3
D2
D1
DØ
U114
74LS243
PA3
PA2
PA1
PAØ
J8-12
J8-10
J8-8
J8-6
J8-1,3,5,7,9,11,13,15,17,19,
21,23,25,27,29,
31,33,35,37,39
SH2,ZNH-10 E
Φ
R57
10K
R52
10K
U103
74LS86
PARDY
J8-4
SH2,ZNB-7 U
AØB
SH2,ZNB-7 T
AIB
SH2,ZNB-2 AH
IORQB
SH2,ZNB-3 AF
RDB
SH2,ZNB-2 AL
MIK
C/D
B/A
IORQ
RD
M1
PASTB
J8-2
R55
10K
SH2,ZNB-4 Y
GPPIO
CE
U101
3881
(GPPIO)
R54
10K
U102
74LS243
PB7
PB6
PB5
PB4
J8-40
J8-38
J8-36
J8-34
VCC
GND
U115
74LS243
PB3
PB2
PB1
PBØ
J8-32
J8-30
J8-28
J8-26
R51
10K
R50
10K
PBRDY
J8-22
PBSTB
J8-24
R56
10K
IEI INT IEO
SH5,ZNB-4 CB
SH5,ZNF-1 EN
PRT3 CC SH5,ZNH-1
SH2,ZNG-5 AO
SH2,ZNH-10 E
SH2,ZNB-7 U
SH2,ZNB-7 T
SH2,ZNB-2 AH
SH2,ZNB-3 AF
SH2,ZNB-2 AL
SH2,ZNB-5 X
SH2,ZNB-2 AM

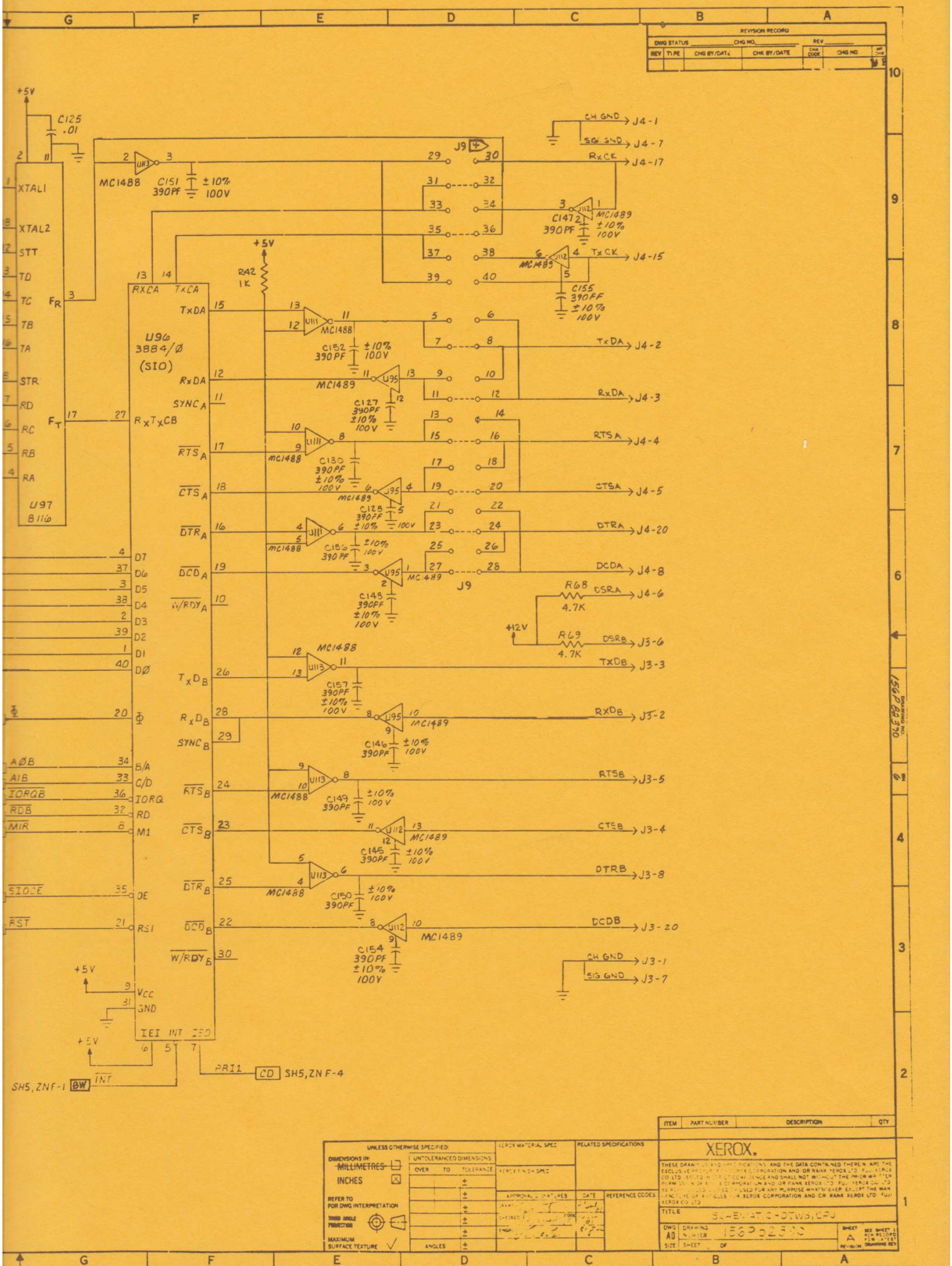
REVISION RECORD
DWG STATUS
CHG NO.
REV
REV | TYPE | CHG BY/DATE | CHK BY/DATE | CHK CODE | CHG NO
+5V
C125 .01
XTAL1
XTAL2
STT
TD
TC
TB
TA
STR
RD
RC
RB
RA
FR
FT
U97 8116
MC1488
C151 390PF ±10% 100V
U96 3884/Ø (SIO)
RXCA
TXCA
TXDA
RXDA
SYNCA
RXTXCB
RTSA
CTSA
DTRA
DCDA
W/RDYA
TXDB
RXDB
SYNCB
RTSB
CTSB
DTRB
DCDB
W/RDYB
D7
D6
D5
D4
D3
D2
D1
DØ
Φ
AØB
AIB
IORQB
RDB
MIR
SIOCE
RST
B/A
C/D
IORQ
RD
M1
OE
RSI
VCC
GND
IEI
INT
IEO
R42 1K
MC1489
C147 390PF ±10% 100V
C155 390PF ±10% 100V
C152 390PF ±10% 100V
C127 390PF ±10% 100V
C130 390PF ±10% 100V
C128 390PF ±10% 100V
C156 390PF ±10% 100V
C148 390PF ±10% 100V
C157 390PF ±10% 100V
C146 390PF ±10% 100V
C149 390PF ±10% 100V
C145 390PF ±10% 100V
C150 390PF ±10% 100V
C154 390PF ±10% 100V
J9
CH GND → J4-1
SG GND → J4-7
RxCK → J4-17
TxCK → J4-15
TxDA → J4-2
RxDA → J4-3
RTSA → J4-4
CTSA → J4-5
DTRA → J4-20
DCDA → J4-8
DSRA → J4-6
DSRB → J3-6
TxDB → J3-3
RxDB → J3-2
RTSB → J3-5
CTSB → J3-4
DTRB → J3-8
DCDB → J3-20
CH GND → J3-1
SIG GND → J3-7
R68 4.7K
R69 4.7K
+12V
PRI1 CD SH5,ZNF-4
SH5,ZNF-1 BW INT
ITEM | PART NUMBER | DESCRIPTION | QTY
UNLESS OTHERWISE SPECIFIED:
DIMENSIONS IN: MILLIMETRES INCHES
REFER TO FOR DWG INTERPRETATION
THIRD ANGLE PROJECTION
MAXIMUM SURFACE TEXTURE
XEROX.
TITLE
SCHEMATIC-DTWS,CPU
DWG SIZE A0
DRAWING NUMBER 1662023-00
SHEET A
REVISION

POW
DISTRIBU

1 UNLESS OTHERWISE SPECIFIED:
RESISTANCE VALUES ARE IN OHMS,
±5%, .25W

CAPACITANCE VALUES ARE IN
MICROFARADS +80 -20%, 50V

2 POWER DISTRIBUTION TABLE

REF DESIGNATIONS	GND	+5	+12	-12	-5
U1-8 17-28, 37-44 54-61	16	9	8		1
U9-12, 14-16, 25, 26, 28 29-34, 36, 45, 49, 51, 52 53, 74, 77, 78, 79, 82, 83 89, 94, 95, 98, 100, 102 103, 104, 108, 110, 112, 114 115-118	7	14			
U13	12	3			
U27, 48, 50, 62 65-73, 75, 76, 80, 86, 90 91, 93, 106, 107	8	16			
U35, 47, 81	10	20			
U46	29	11			
U63, 64, 92	12	24			
U84-87	9	18			
U96	31	9			
U97	11	2	9		
U99	5	24			
U101, 105	11	26			
U109	20	21	40		1
U111, 113	7		14	1	

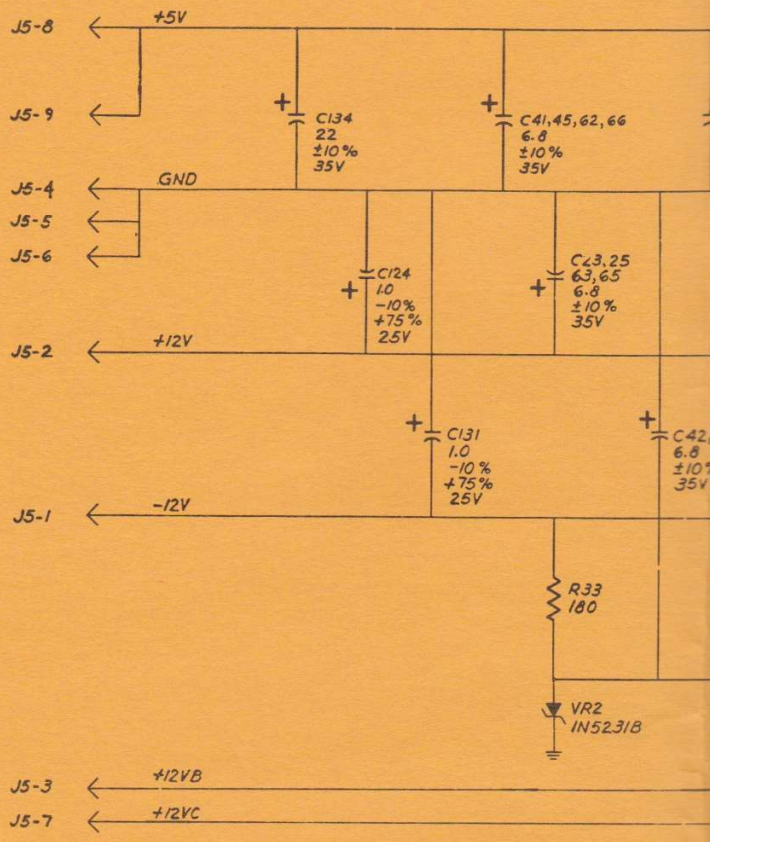

3 REFERENCE DESIGNATIONS

LAST USED	NOT USED
C196	C27,38,71,91,92,93,192
E3	
J11	
R69	R37
S1	
U119	
Q1	
VR2	
CR1	

LAST USED	NOT USED
Y3	

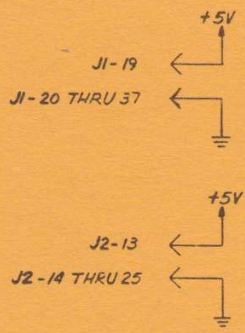

4 FOR NORMAL OPERATION SHUNTS TO BE INSTALLED IN THE FOLLOWING POSITIONS

REF DESIG	BETWEEN PINS
E1	1,2
E2	1,2
J9	7&8, 11&12, 15&16 19&20, 23&24 27&28, 31&32 35&36
J10	3&4, 7&8

5 LAST INTERCONNECT LETTER USED "CD"

6 SPARE GATES :

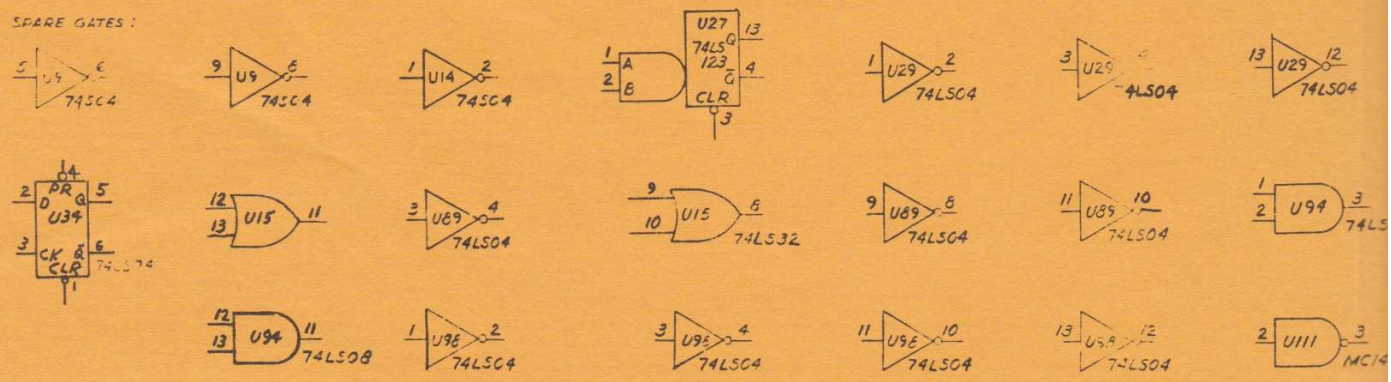

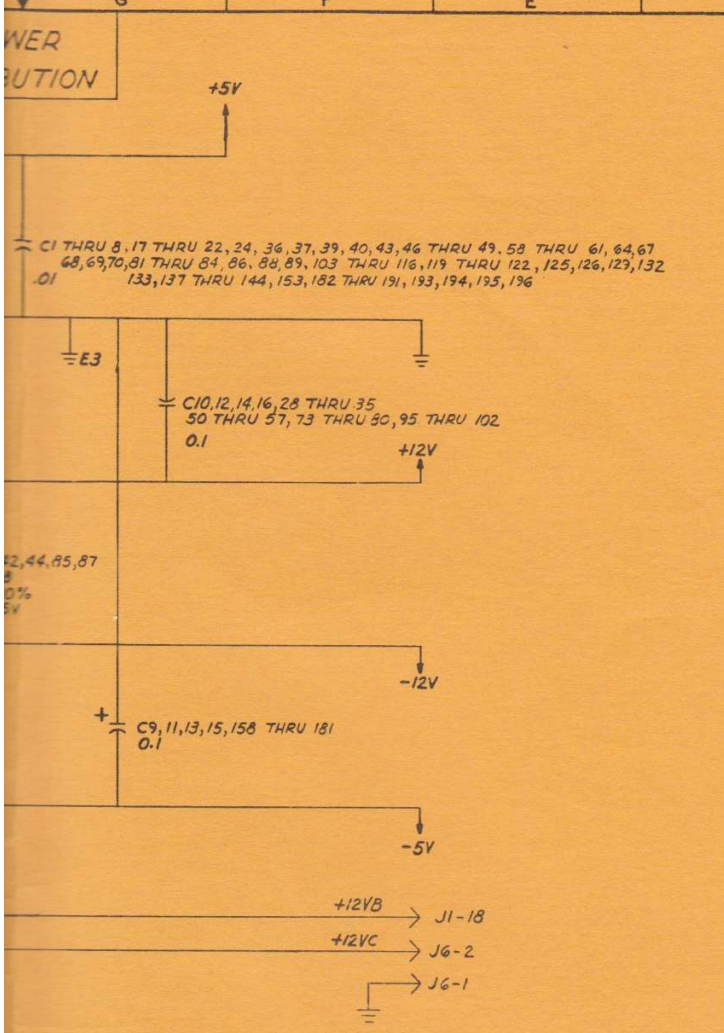

REVISION RECORD

DWG STATUS	DWG NO	REV

REV	TYPE	CHG BY/DATE	CHK BY/DATE	CHK CODE	CHG NO.	MT CHK
A	ISS.					

	6	5	4	3	2	
	A0	A0	A0	A0	A0	

UNLESS OTHERWISE SPECIFIED:
DIMENSIONS IN ~~MILLIMETRES~~ / INCHES
REFER TO 8APBCC08 FOR DWG INTERPRETATION
THIRD ANGLE PROJECTION
MAXIMUM SURFACE TEXTURE ✓

UNTOLERANCED DIMENSIONS		
OVER	TO	TOLERANCE
		±
		±
		±
		±
		±
ANGLES		±

ITEM	PART NUMBER	DESCRIPTION	QTY

XEROX.

TITLE

DWG NO 156P82390 REV AQ

SIZE A3 SHEET 1 OF 4

DRAWING NO. 156P82390

L508

7488

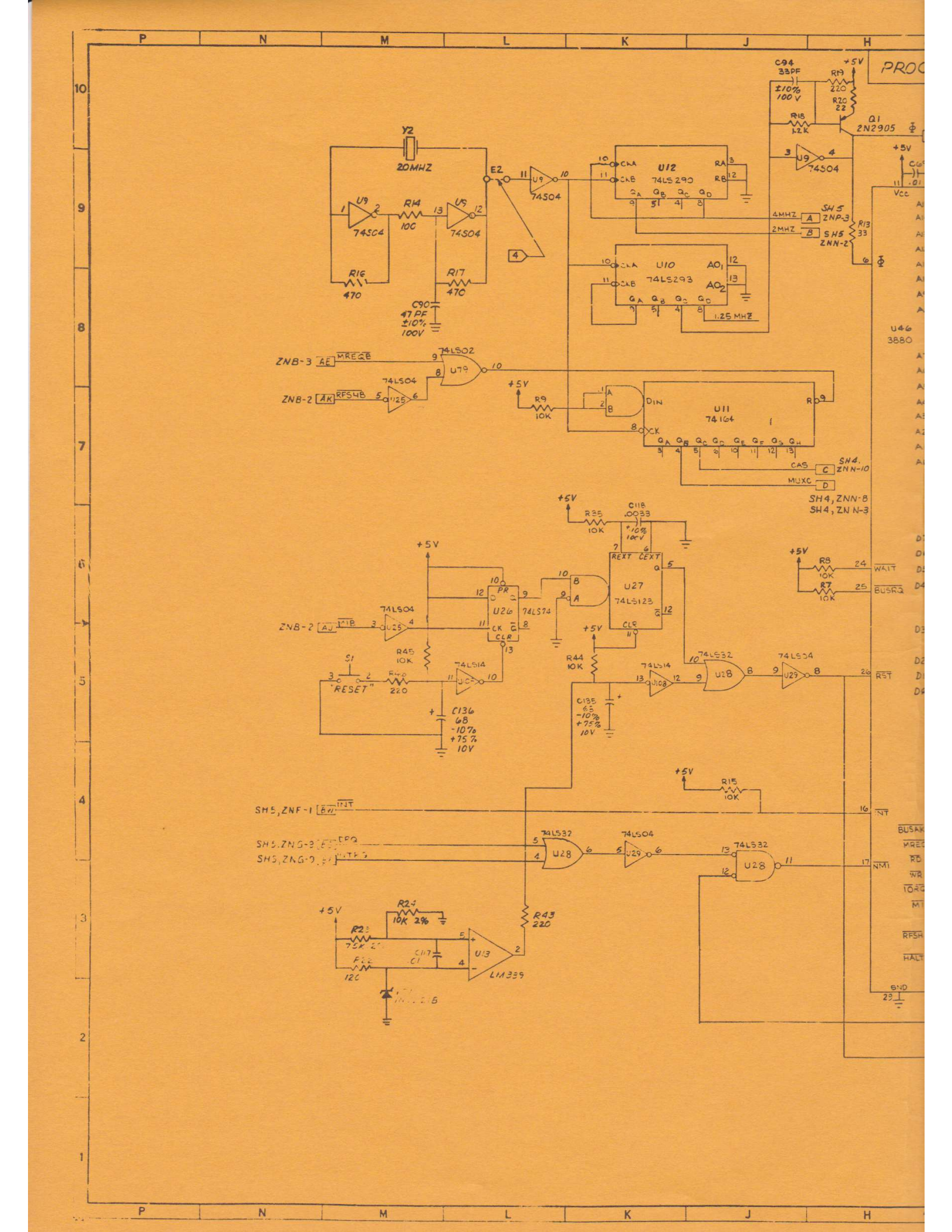
PROC
Y2
20MHZ
U9
74S04
R14
10C
R16
470
R17
470
C90
47PF
±10%
100V
U12
74LS290
U10
74LS293
1.25 MHZ
4MHZ
2MHZ
SH5
ZNP-3
SH5
ZNN-2
R13
33
Q1
2N2905
R19
220
R20
22
R18
1.2K
C94
33PF
±10%
100V
+5V
U46
3880
ZNB-3
MREQB
ZNB-2
RFSHB
74LS02
U79
74LS04
U25
R9
10K
U11
74164
DIN
CAS
MUXC
SH4, ZNN-10
SH4, ZNN-8
SH4, ZNN-3
R35
10K
C118
.0033
±10%
100V
U27
74LS123
REXT
CEXT
CLR
U26
74LS74
ZNB-2
R45
10K
S1
"RESET"
R46
220
74LS14
C136
68
-10%
+75%
10V
R44
10K
C135
.1
-10%
+75%
10V
74LS32
U28
74LS04
U29
R8
10K
R7
10K
WAIT
BUSRQ
RST
R15
10K
SH5, ZNF-1
INT
SH5, ZNG-3
SH5, ZNG-9
NMI
R24
10K 2%
R43
220
U13
LM339
120
BUSAK
MREQ
RD
WR
IORQ
MT
RFSH
HALT
GND

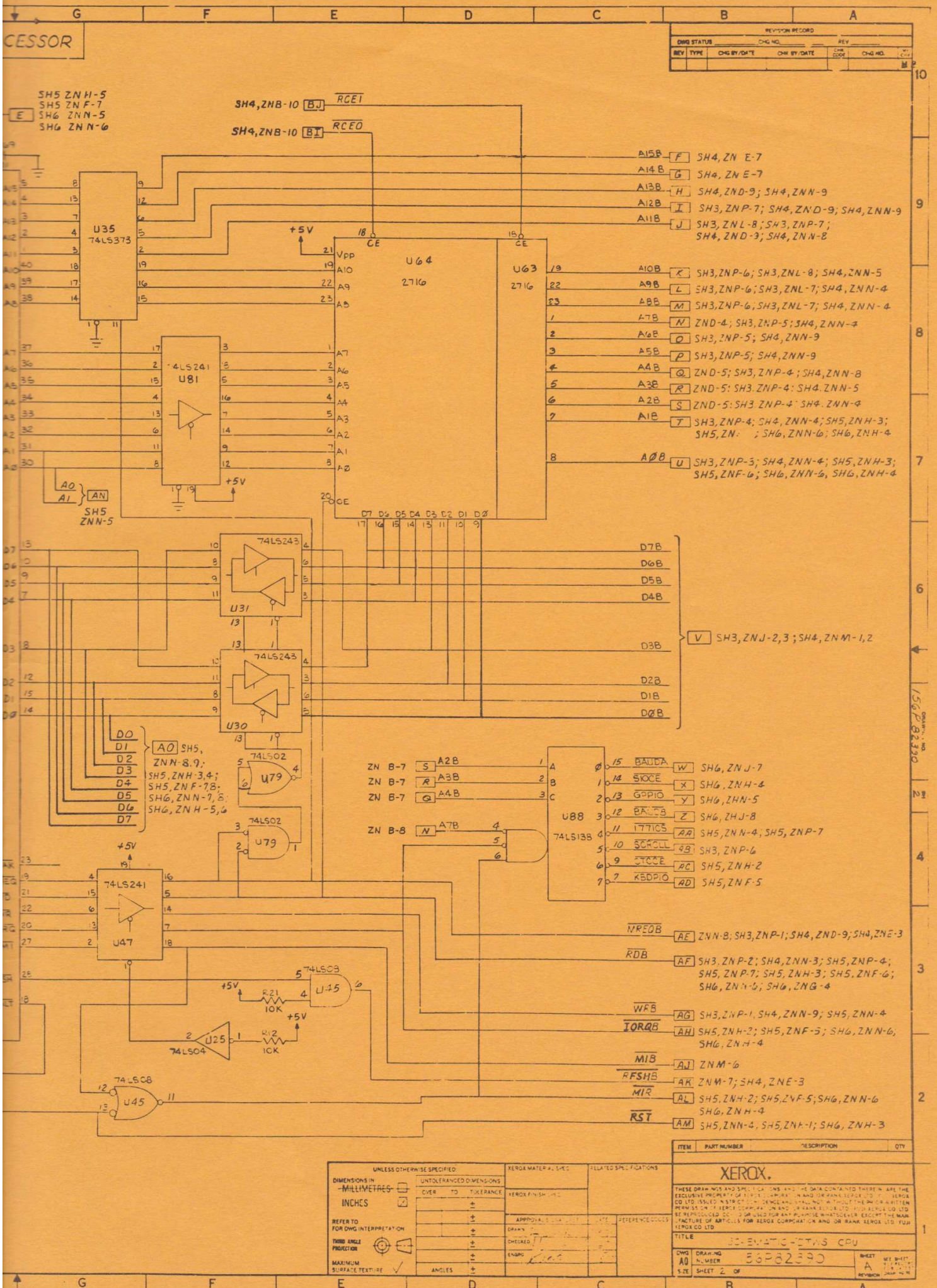
CESSOR
REVISION RECORD
DWG STATUS
SH5 ZNH-5
SH5 ZNF-7
SH6 ZNN-5
SH6 ZNN-6
SH4,ZNB-10 BJ RCE1
SH4,ZNB-10 BI RCE0
U35
74LS373
U64
2716
U63
2716
U81
74LS241
U31
74LS243
U30
74LS243
U47
74LS241
U88
74LS138
U79
74LS02
U45
74LS08
U25
74LS04
U75
74LS08
+5V
A15B F SH4,ZN E-7
A14B G SH4,ZN E-7
A13B H SH4,ZND-9; SH4,ZNN-9
A12B I SH3,ZNP-7; SH4,ZND-9; SH4,ZNN-9
A11B J SH3,ZNL-8; SH3,ZNP-7; SH4,ZND-3; SH4,ZNN-8
A10B K SH3,ZNP-6; SH3,ZNL-8; SH4,ZNN-5
A9B L SH3,ZNP-6; SH3,ZNL-7; SH4,ZNN-4
A8B M SH3,ZNP-6, SH3,ZNL-7; SH4,ZNN-4
A7B N ZND-4; SH3,ZNP-5; SH4,ZNN-4
A6B Q SH3,ZNP-5; SH4,ZNN-9
A5B P SH3,ZNP-5; SH4,ZNN-9
A4B Q ZND-5; SH3,ZNP-4; SH4,ZNN-8
A3B R ZND-5; SH3,ZNP-4; SH4,ZNN-5
A2B S ZND-5; SH3,ZNP-4; SH4,ZNN-4
A1B T SH3,ZNP-4; SH4,ZNN-4; SH5,ZNH-3; SH5,ZN- ; SH6,ZNN-6; SH6,ZNH-4
AØB U SH3,ZNP-3; SH4,ZNN-4; SH5,ZNH-3; SH5,ZNF-6; SH6,ZNN-6, SH6,ZNH-4
D7B D6B D5B D4B D3B D2B D1B DØB V SH3,ZNJ-2,3; SH4,ZNM-1,2
A0 A1 AN SH5 ZNN-5
D0 D1 D2 D3 D4 D5 D6 D7 A0 SH5, ZNN-8,9; SH5,ZNH-3,4; SH5,ZNF-7,8; SH6,ZNN-7,8; SH6,ZNH-5,6
ZN B-7 S A2B
ZN B-7 R A3B
ZN B-7 Q A4B
ZN B-8 N A7B
BAUDA W SH6,ZNJ-7
SIOCE X SH6,ZNH-4
GPPIO Y SH6,ZHN-5
BAUDB Z SH6,ZHJ-8
1771CS AA SH5,ZNN-4; SH5,ZNP-7
SCROLL AB SH3,ZNP-6
SIOCE AC SH5,ZNH-2
KBDPIO AD SH5,ZNF-5
MREQB AE ZNN-8; SH3,ZNP-1; SH4,ZND-9; SH4,ZNE-3
RDB AF SH3,ZNP-2; SH4,ZNN-3; SH5,ZNP-4; SH5,ZNP-7; SH5,ZNH-3; SH5,ZNF-6; SH6,ZNN-5; SH6,ZNG-4
WRB AG SH3,ZNP-1, SH4,ZNN-9; SH5,ZNN-4
IORQB AH SH5,ZNH-2; SH5,ZNF-5; SH6,ZNN-6, SH6,ZNH-4
MIB AJ ZNM-6
RFSHB AK ZNM-7; SH4,ZNE-3
MIR AL SH5,ZNH-2; SH5,ZNF-5; SH6,ZNN-6 SH6,ZNH-4
RST AM SH5,ZNN-4; SH5,ZNH-1; SH6,ZNH-3
R21 10K
R12 10K
ITEM PART NUMBER DESCRIPTION QTY
UNLESS OTHERWISE SPECIFIED:
DIMENSIONS IN MILLIMETRES INCHES
XEROX
TITLE
DRAWING NUMBER 6SP82390
SHEET 2 OF

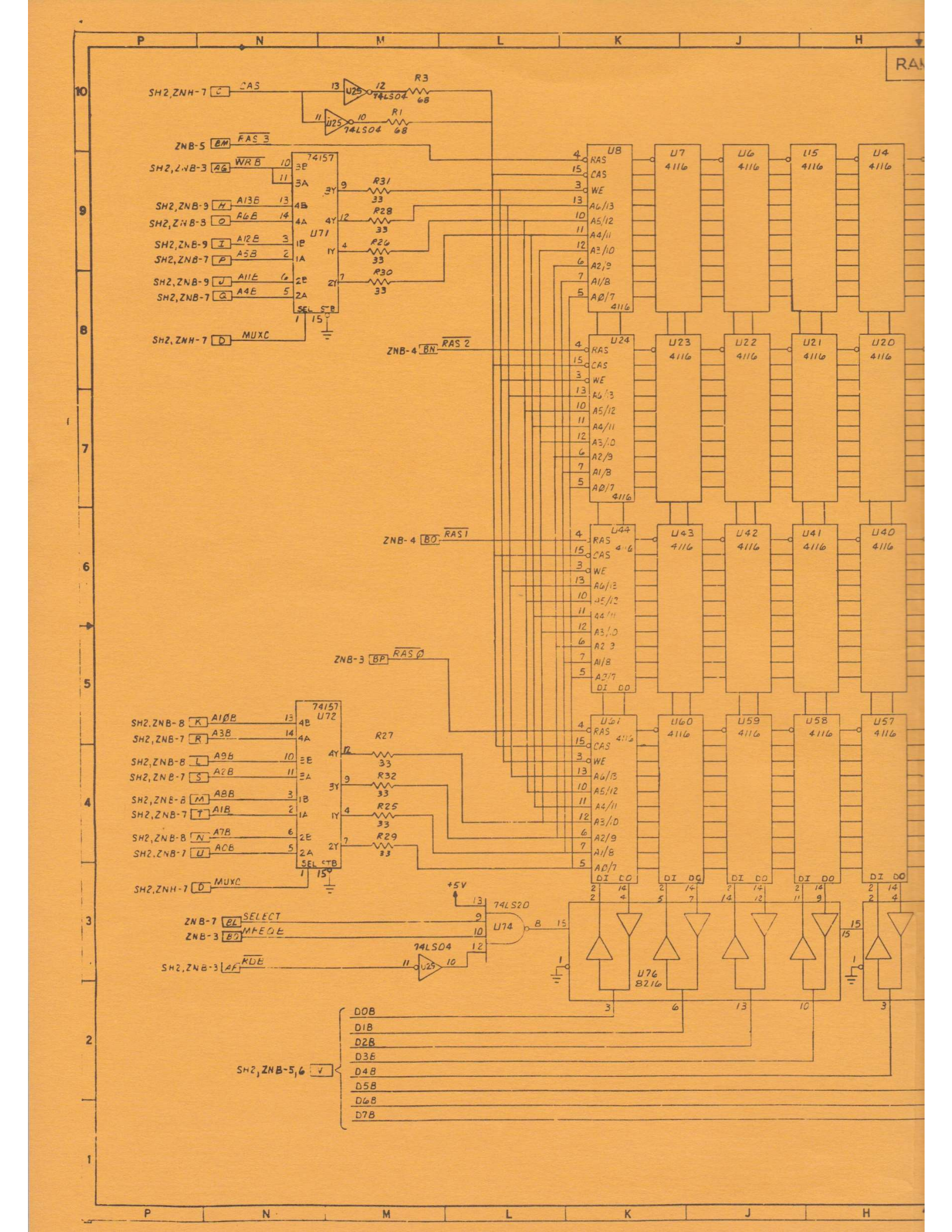
RAS
SH2,ZNH-7 C CAS
U25 74LS04
R3 68
R1 68
ZNB-5 BM FAS 3
SH2,ZNB-3 AG WRB
SH2,ZNB-9 H A13B
SH2,ZNB-8 O A6B
SH2,ZNB-9 I A12B
SH2,ZNB-7 P A5B
SH2,ZNB-9 J A11B
SH2,ZNB-7 Q A4B
74157 U71
R31 33
R28 33
R26 33
R30 33
SH2,ZNH-7 D MUXC
ZNB-4 BN RAS 2
ZNB-4 BO RAS 1
ZNB-3 BP RAS Ø
U8 U7 U6 U15 U4
U24 U23 U22 U21 U20
U44 U43 U42 U41 U40
U61 U60 U59 U58 U57
4116
RAS CAS WE A6/13 A5/12 A4/11 A3/10 A2/9 A1/8 AØ/7
DI DO
SH2,ZNB-8 K A10B
SH2,ZNB-7 R A3B
SH2,ZNB-8 L A9B
SH2,ZNB-7 S A2B
SH2,ZNB-8 M A8B
SH2,ZNB-7 T A1B
SH2,ZNB-8 N A7B
SH2,ZNB-7 U ACB
74157 U72
R27 33
R32 33
R25 33
R29 33
SH2,ZNH-7 D MUXC
+5V
ZNB-7 BL SELECT
ZNB-3 BD MREQE
74LS20 U74
SH2,ZNB-3 AF RDE
74LS04 U25
U76 8216
DOB
D1B
D2B
D3B
D4B
D5B
D6B
D7B
SH2,ZNB-5,6 V

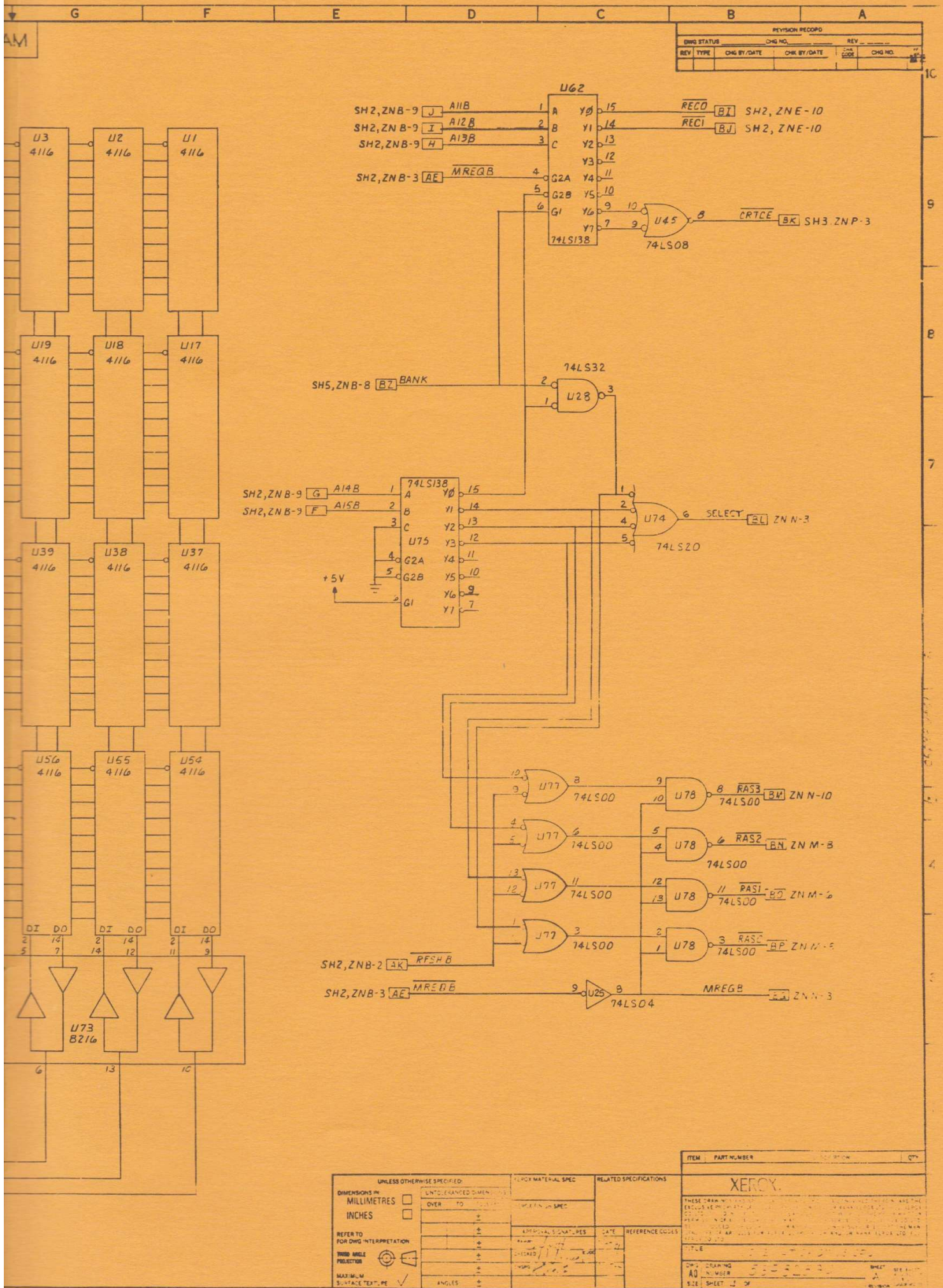
U62
74LS138
SH2,ZNB-9 J A11B
SH2,ZNB-9 I A12B
SH2,ZNB-9 H A13B
SH2,ZNB-3 AE MREQB
RECO BI SH2,ZNE-10
RECI BJ SH2,ZNE-10
U45
74LS08
CRTCE BK SH3,ZNP-3
U3 4116
U2 4116
U1 4116
U19 4116
U18 4116
U17 4116
U39 4116
U38 4116
U37 4116
U56 4116
U55 4116
U54 4116
DI DO
U73 B216
SH5,ZNB-8 BZ BANK
74LS32
U28
SH2,ZNB-9 G A14B
SH2,ZNB-9 F A15B
74LS138
U75
+5V
U74
74LS20
SELECT BL ZNN-3
U77
74LS00
U78
74LS00
RAS3 BM ZNN-10
RAS2 BN ZNM-8
RAS1 BO ZNM-6
RAS0 BP ZNM-5
SH2,ZNB-2 AK RFSHB
SH2,ZNB-3 AE MREQB
U25
74LS04
MREQB BA ZNN-3